Ameri-Shred Corp.

E-SCRAP & E-WASTE SHREDDERS

DS-45 & DS-55

Ameri-Shred's E-Scrap & E-Waste Shredders utilize a low speed, high torque dual shaft design to easily shred a wide range of materials to a desired size.

Materials **INCLUDE:**

- **E-Scrap**
- **Hard Drives**
- **Circuit Boards**
- **Data Tapes**
- **Tablets**
- **CD's & DVD's**
- **Laptops**

E-Scrap

Hard Drives

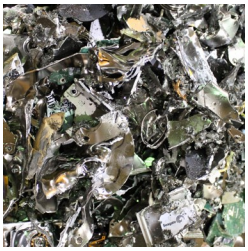

Circuit Boards

Data Tapes

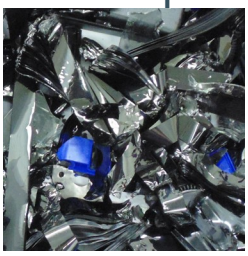

Features & Options

SMALL FOOTPRINT
Right angle drives allow for a compact design, minimizing floor space.

BEARING PROTECTION
Shredded contaminants are prevented from reaching the bearings through the use of false walls and seals.

INDIVIDUAL CLEANING FINGERS
Reduces wrapping and material packing between the cutters, while being easy to remove and adjust.

CUSTOM LAYOUTS
System Engineers will work to ensure the shredder and supports fit seamlessly into your system.

CUTTER DESIGN
The number and length of hooks, as well as cutter width and material are selected to maximize throughput at the required shred size.

AUTO SHAFT REVERSAL
Improves online reliability by reorienting material to grab, preventing overfeeding, and protecting against damage from unshreddable objects.

HIGH TORQUE, LOW SPEED TECHNOLOGY
Efficiently process bulk fed, tough to shred materials. Less downtime, noise and dust emission than high speed shredders.

E-SCRAP & E-WASTE SHREDDERS

45 - 55 HP Standard 26 1/2" L. X 22 1/4" W. Cutting Chamber

MODELS: DS-45 & DS-55	
DRIVE	ELECTRIC
NUMBER OF MOTORS	2
HORSEPOWER	45 HP - 25HP & 20HP MOTORS 55 HP - 30HP & 25HP MOTORS
VOLTAGE	230/460V - 3 PHASE
CUTTER THICKNESS (nominal)	5/8", 3/4", 1", 1 1/2", 2"
CUTTER MATERIAL	4140 HT, AR500
CUTTER DIAMETER	10 3/8"
HEX SHAFT SIZE	4 5/8"
CUTTING CHAMBER (W X L)	22 1/4" W X 26 1/2" L.
WEIGHT	4300 Lbs.

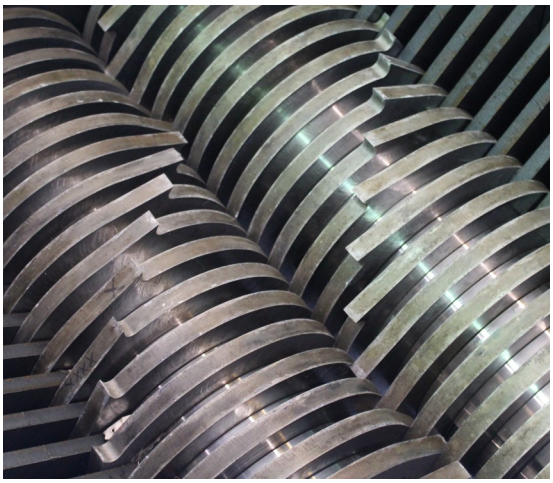

Hopper and Stand

ARE CUSTOM DESIGNED PER APPLICATION

Layout drawings are just a starting point

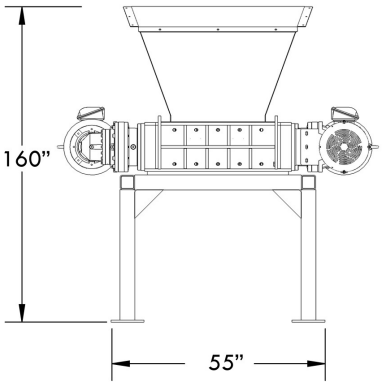

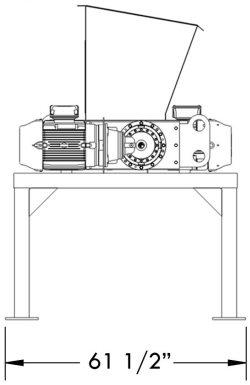

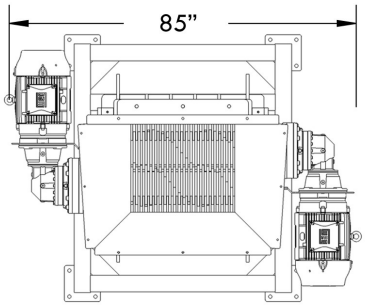

Let us provide you with a TURNKEY SOLUTION

Our team of experienced salespeople and system engineers take a special interest in what you need to shred. Everything from the cutter profile to the system layout is carefully considered to ensure you obtain the shred size and throughput you need. Our goal is to maximize the efficiency of your process with a shredder that fits seamlessly with your other equipment.

3490 US 23 North, Alpena, MI 49707
Phone 800-634-8981
Fax 989-358-6122

Email info@ameri-shred.com
www.ameri-shred.com